TULI

4016265_001

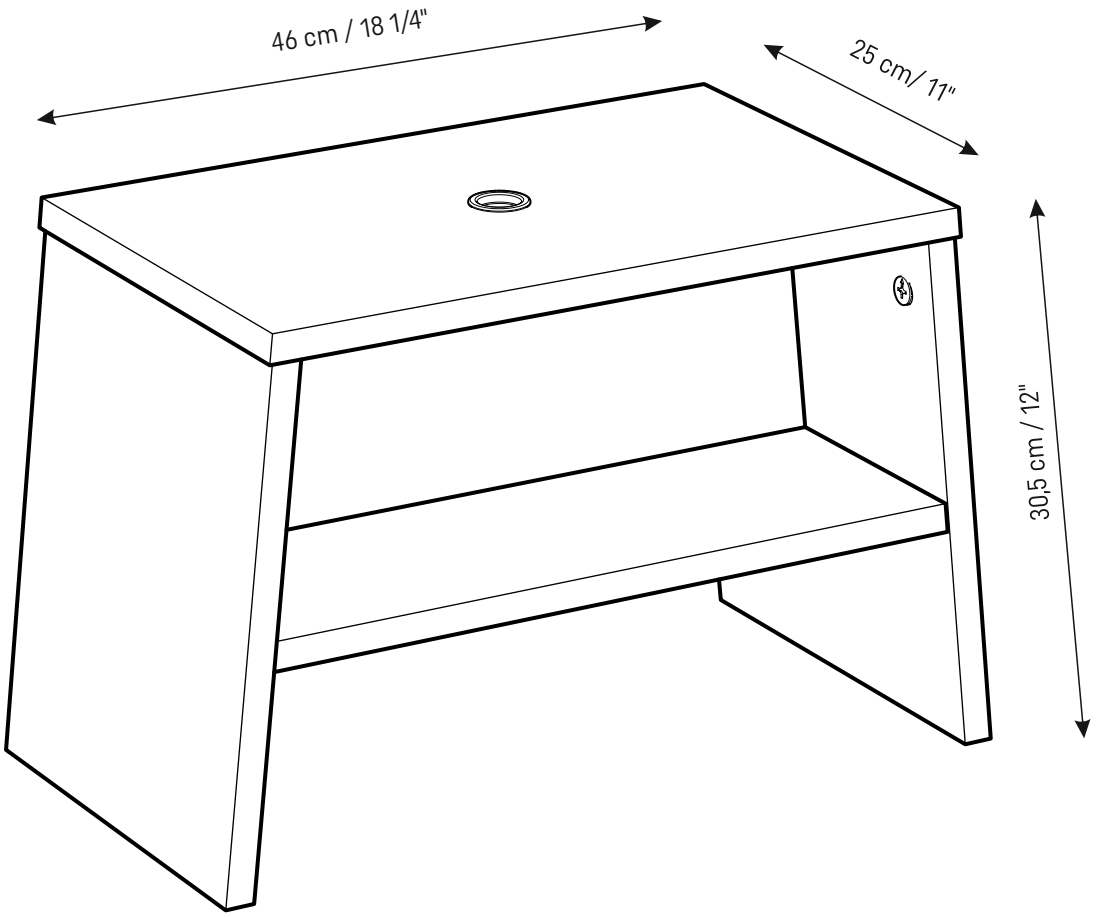

PL • vox.pl
EU • voxfurniture.com
US • voelkelcorp.com

Meble VOX sp. z o.o. sp. k.
ul. Gdyńska 143
62-004 Czerwonak

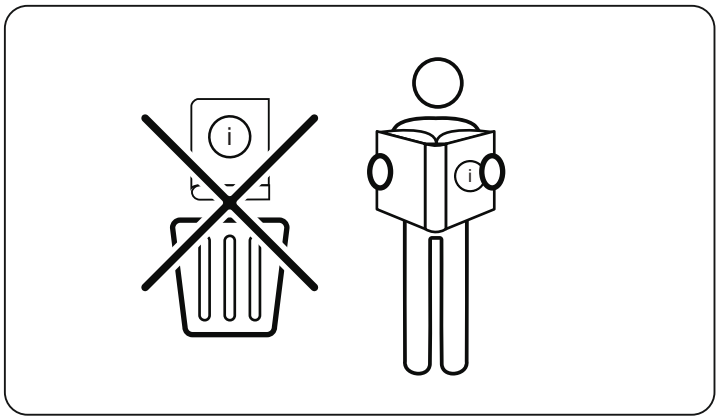

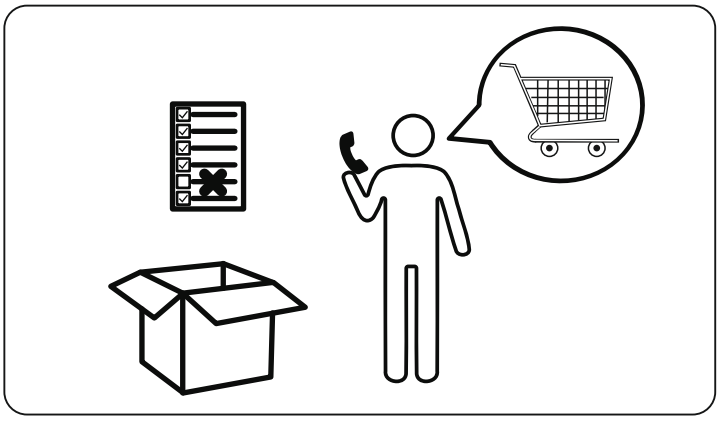

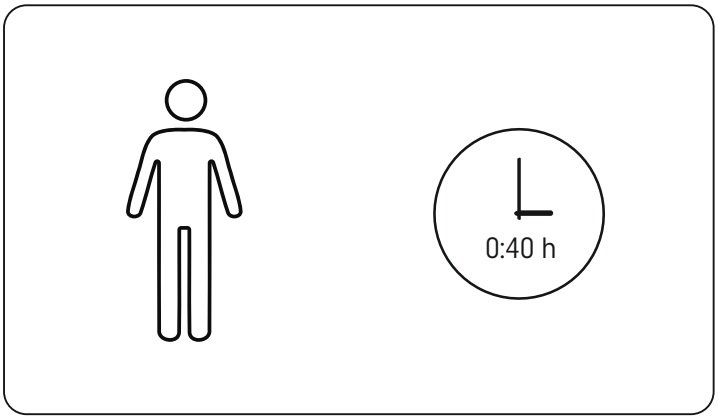
0:40 h

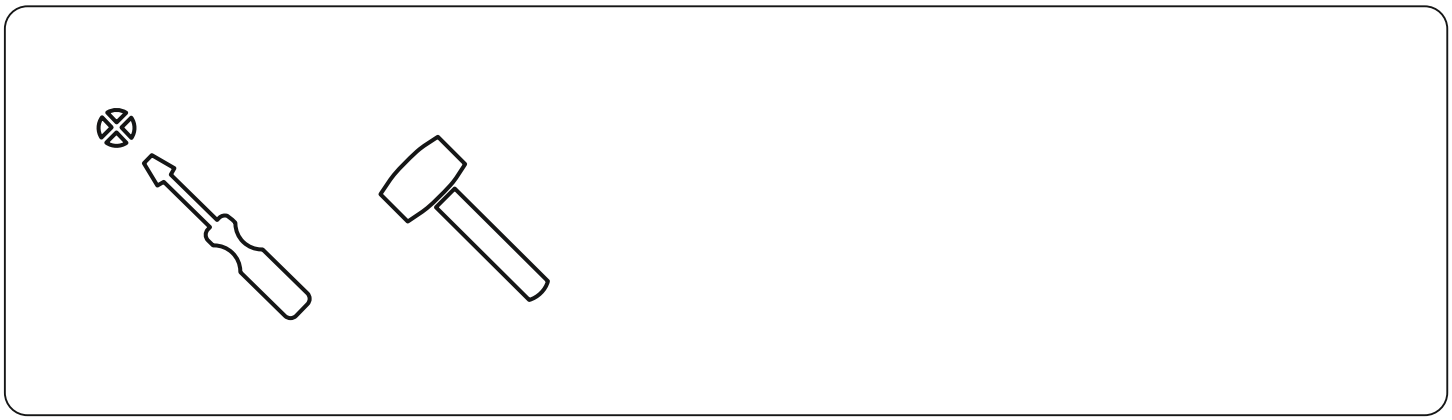

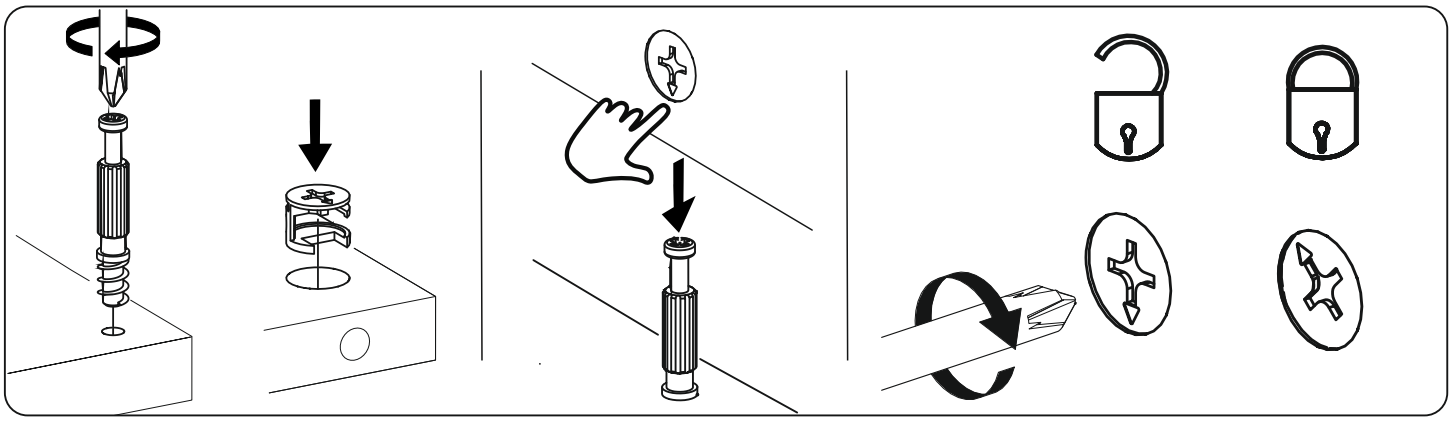

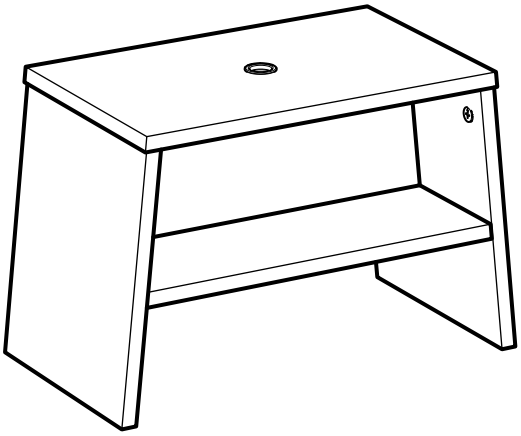

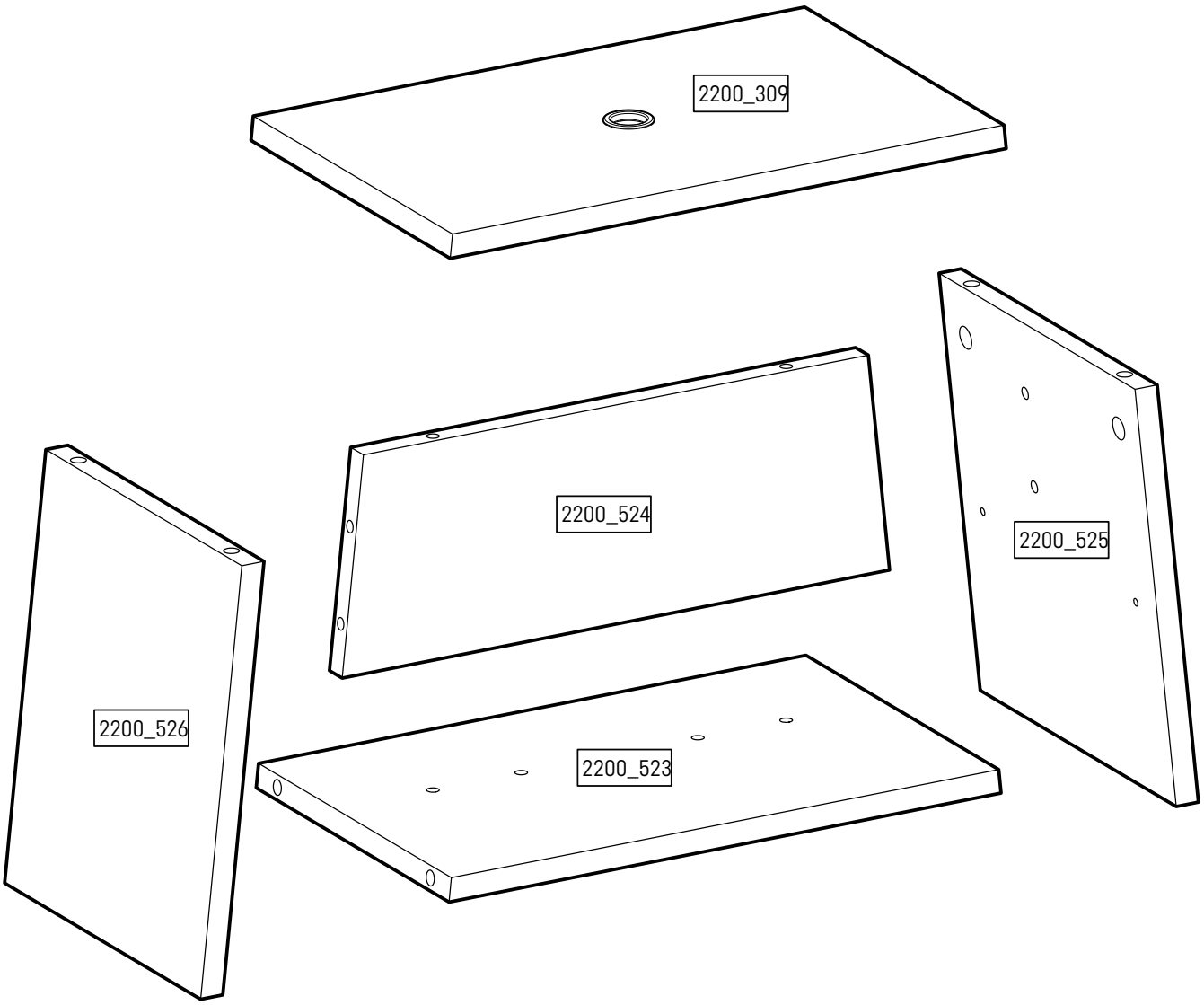
2200_309
2200_524
2200_525
2200_526
2200_523

1000806 x 1	1005857 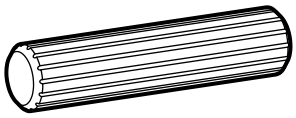 x 8	1006091 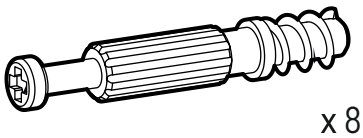 x 8
1005367 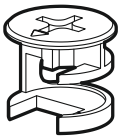 x 8	1005876 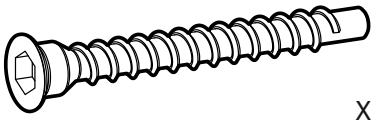 x 2	1112268 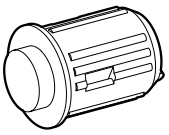 x 4

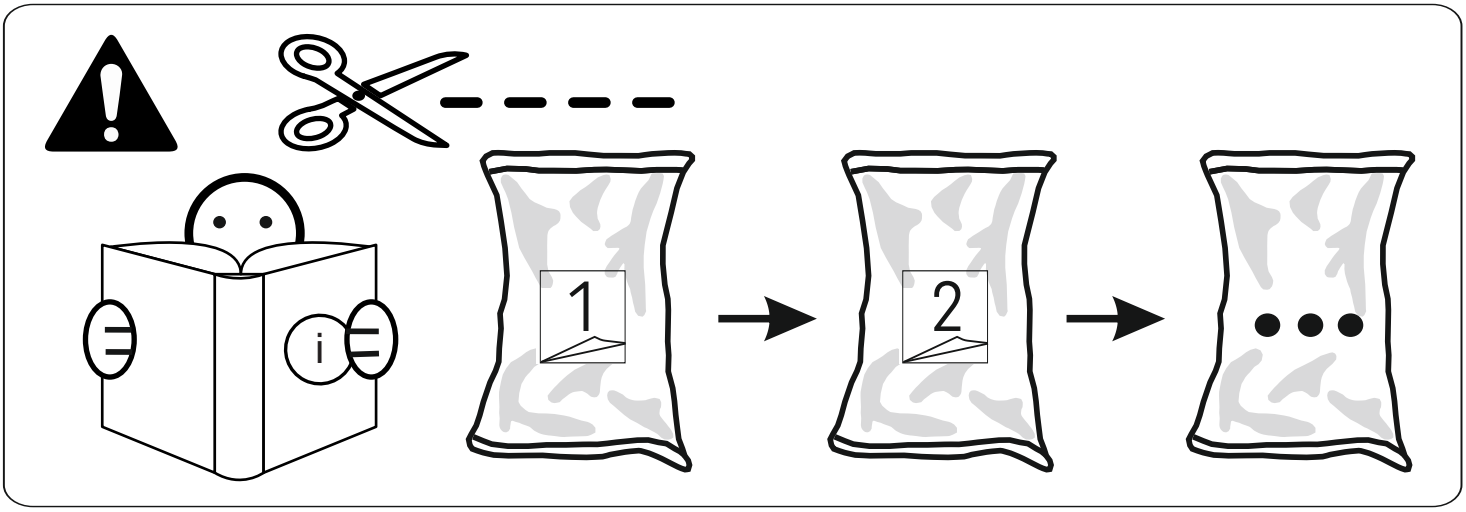

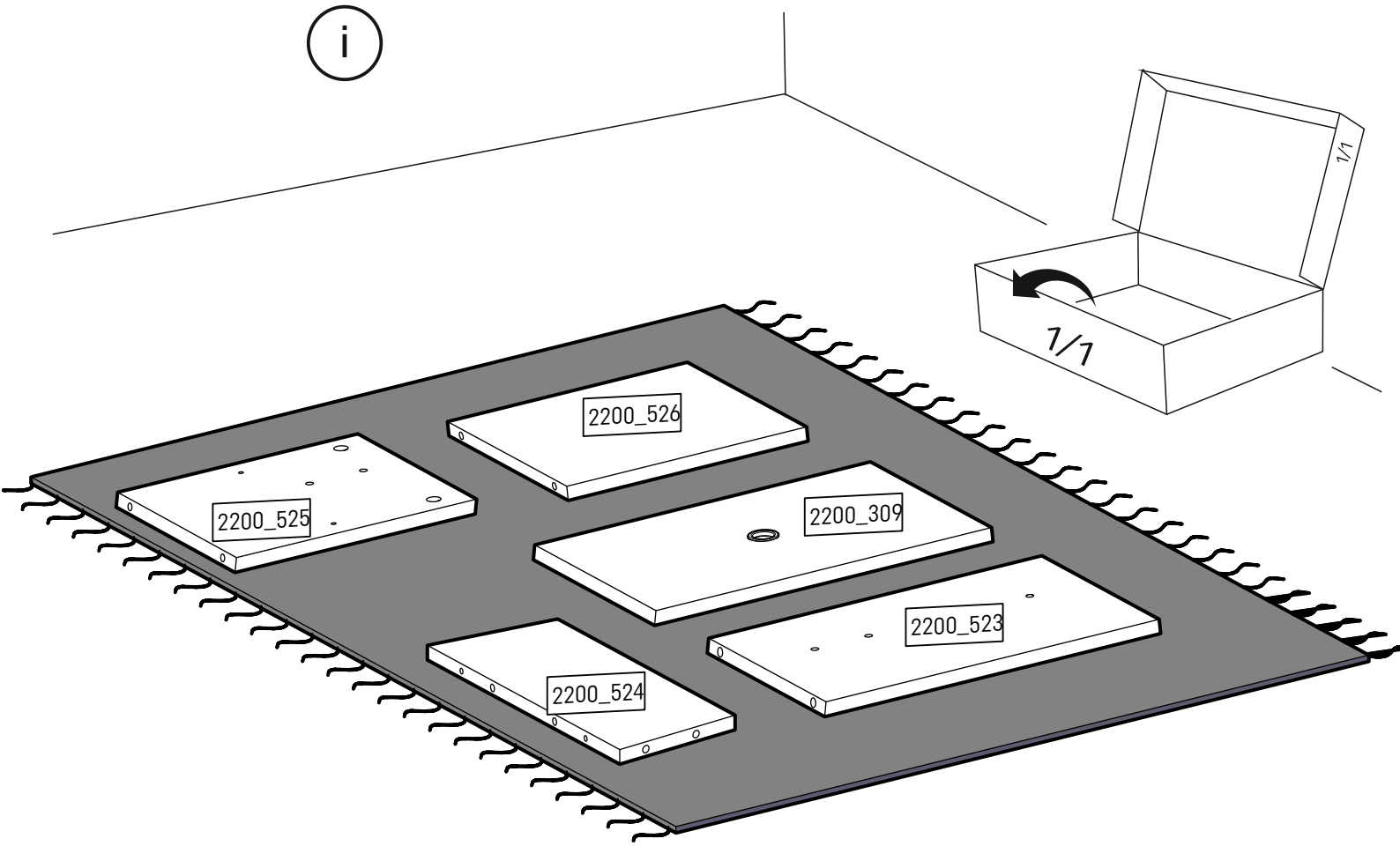

1

1112268 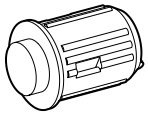 x 2	1005367 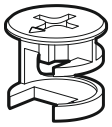 x 2	1006091 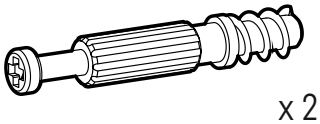 x 2

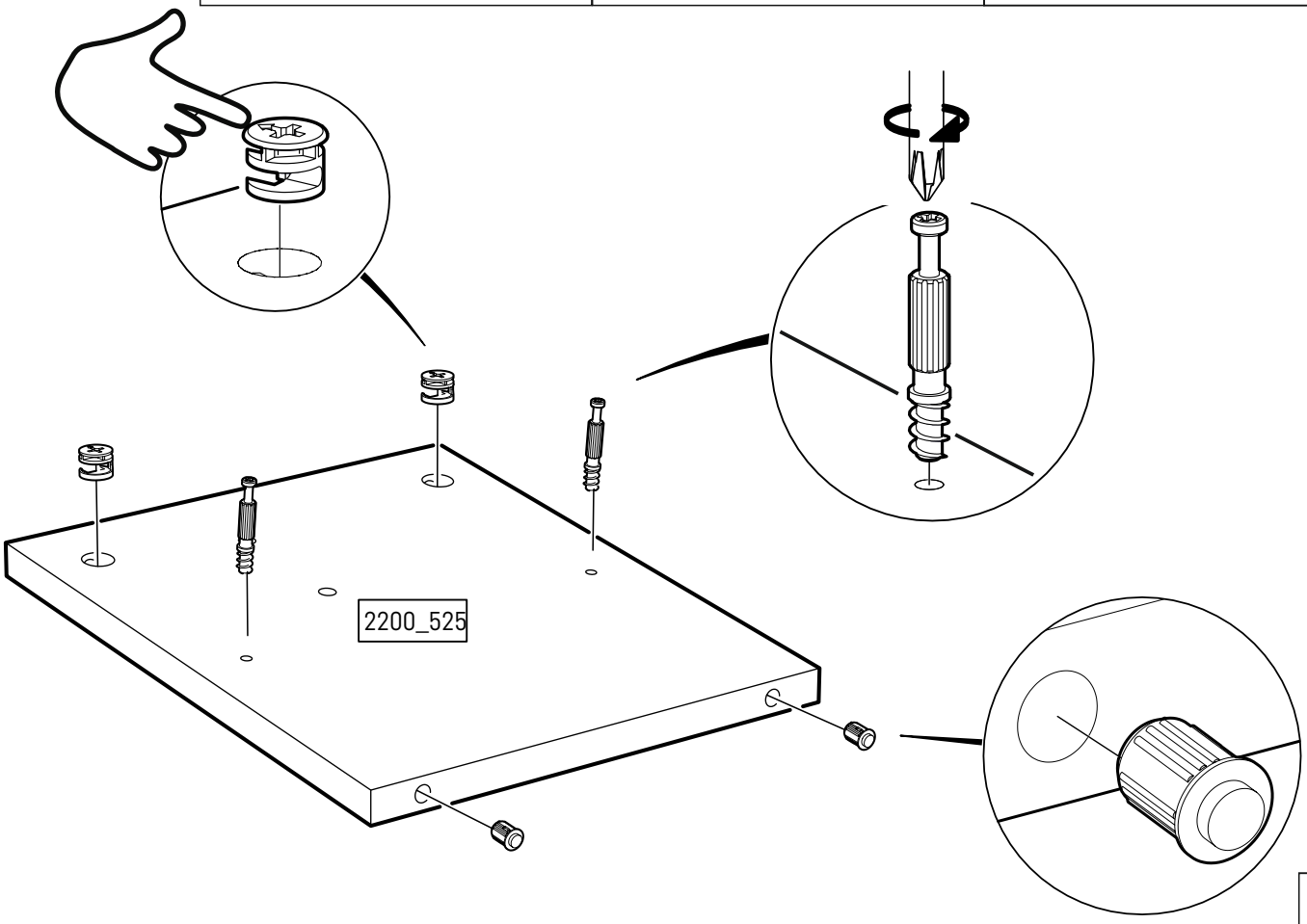

2

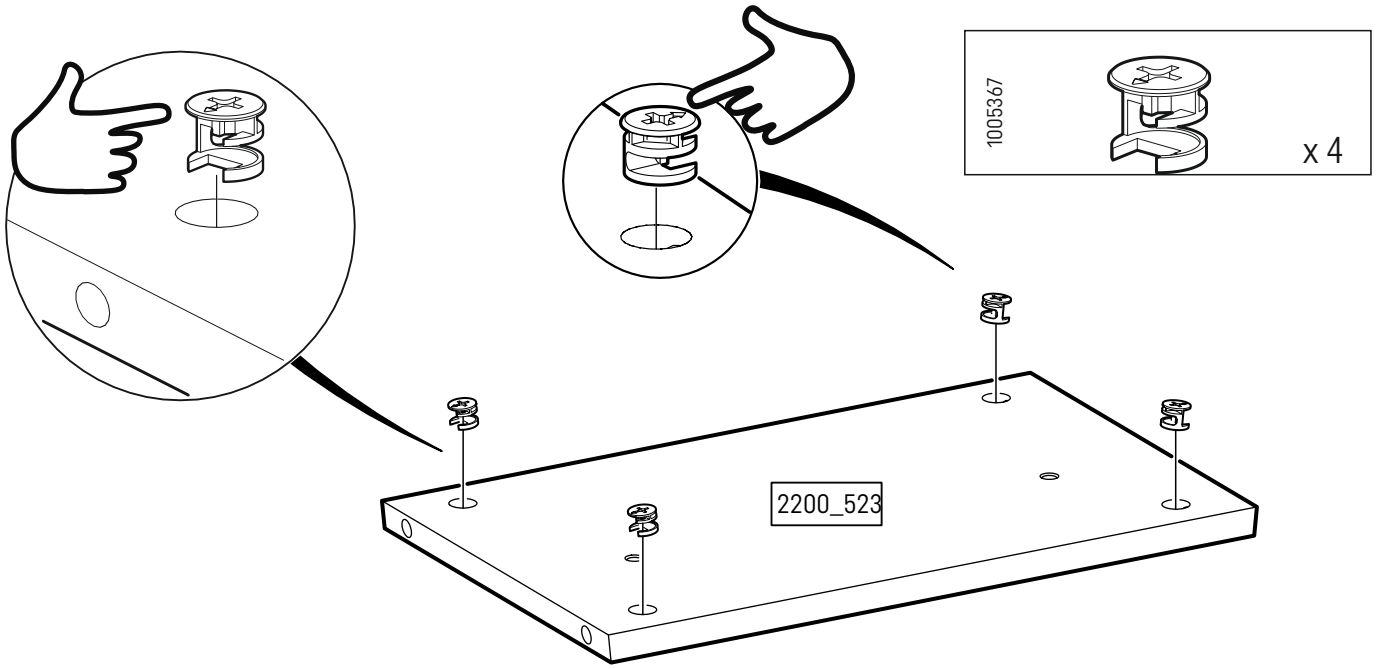
1005367
x 4
2200_523

3

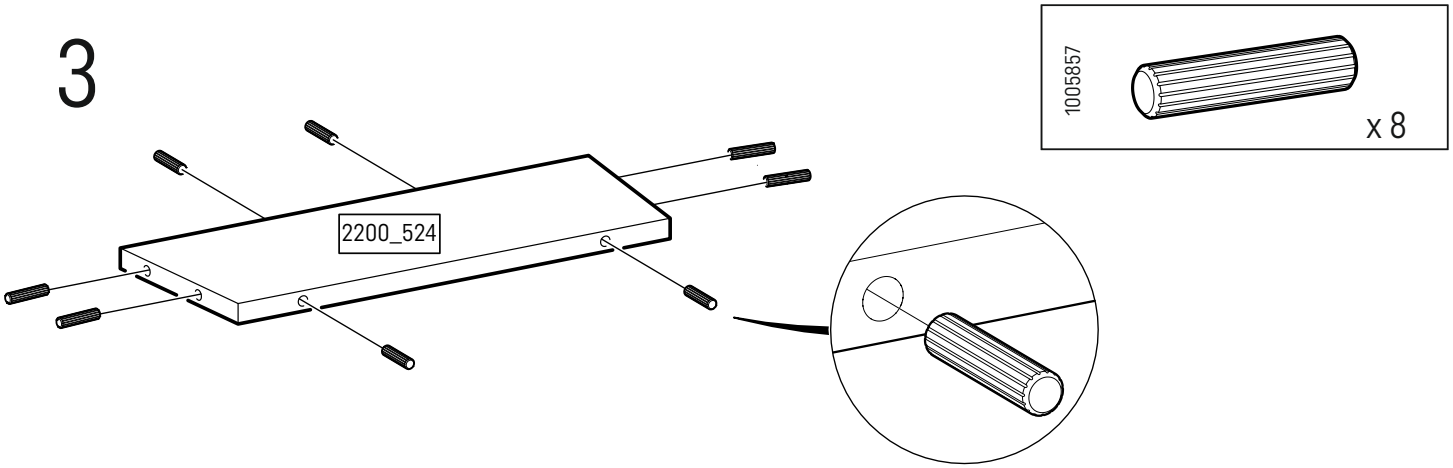
1005857
x 8
2200_524

4

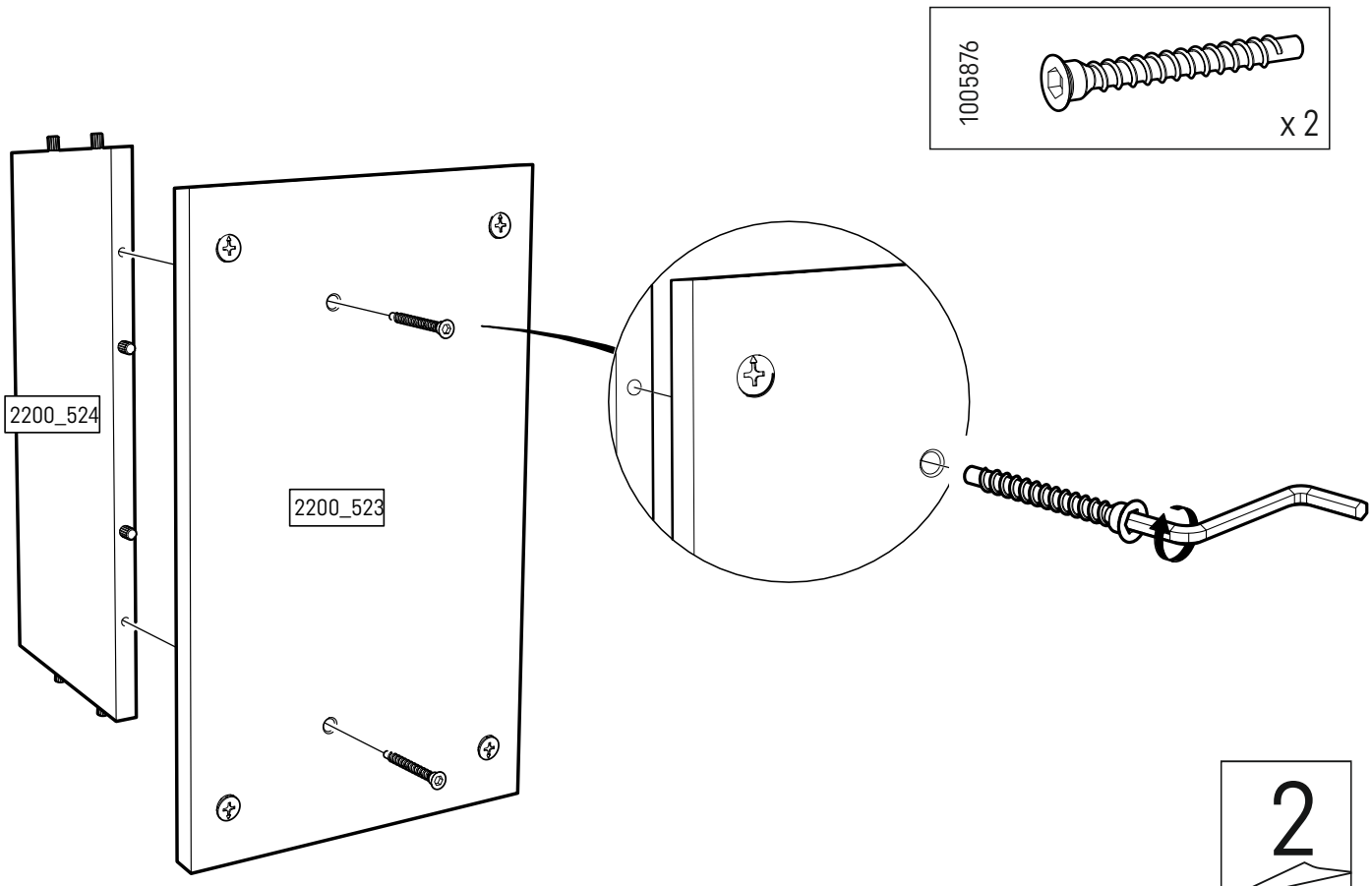
1005876
x 2
2200_524
2200_523

5

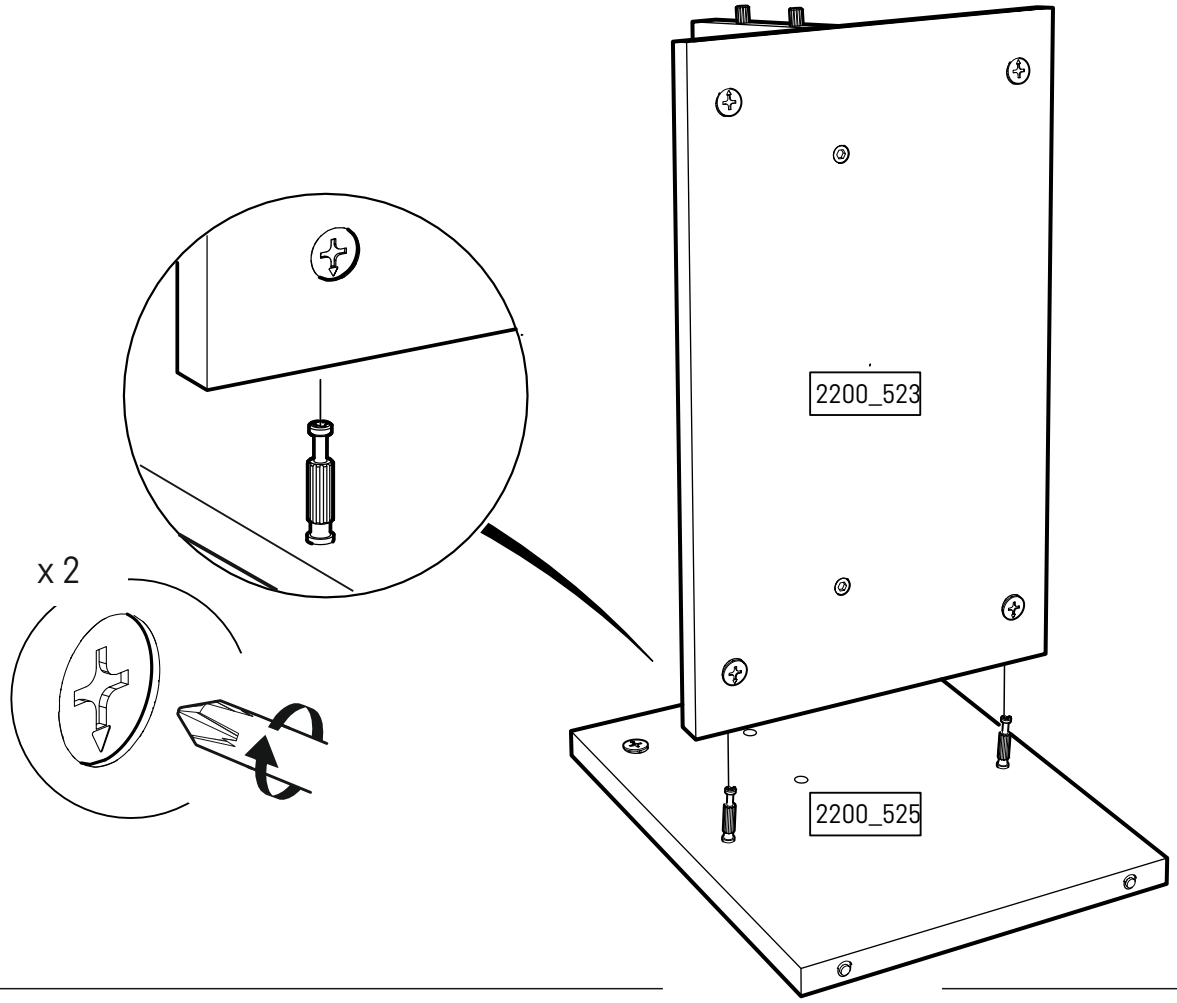

6

1112268 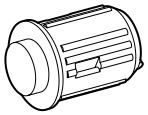 x 2	1005367 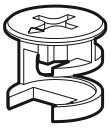 x 2	1006091 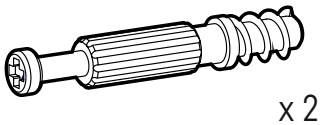 x 2

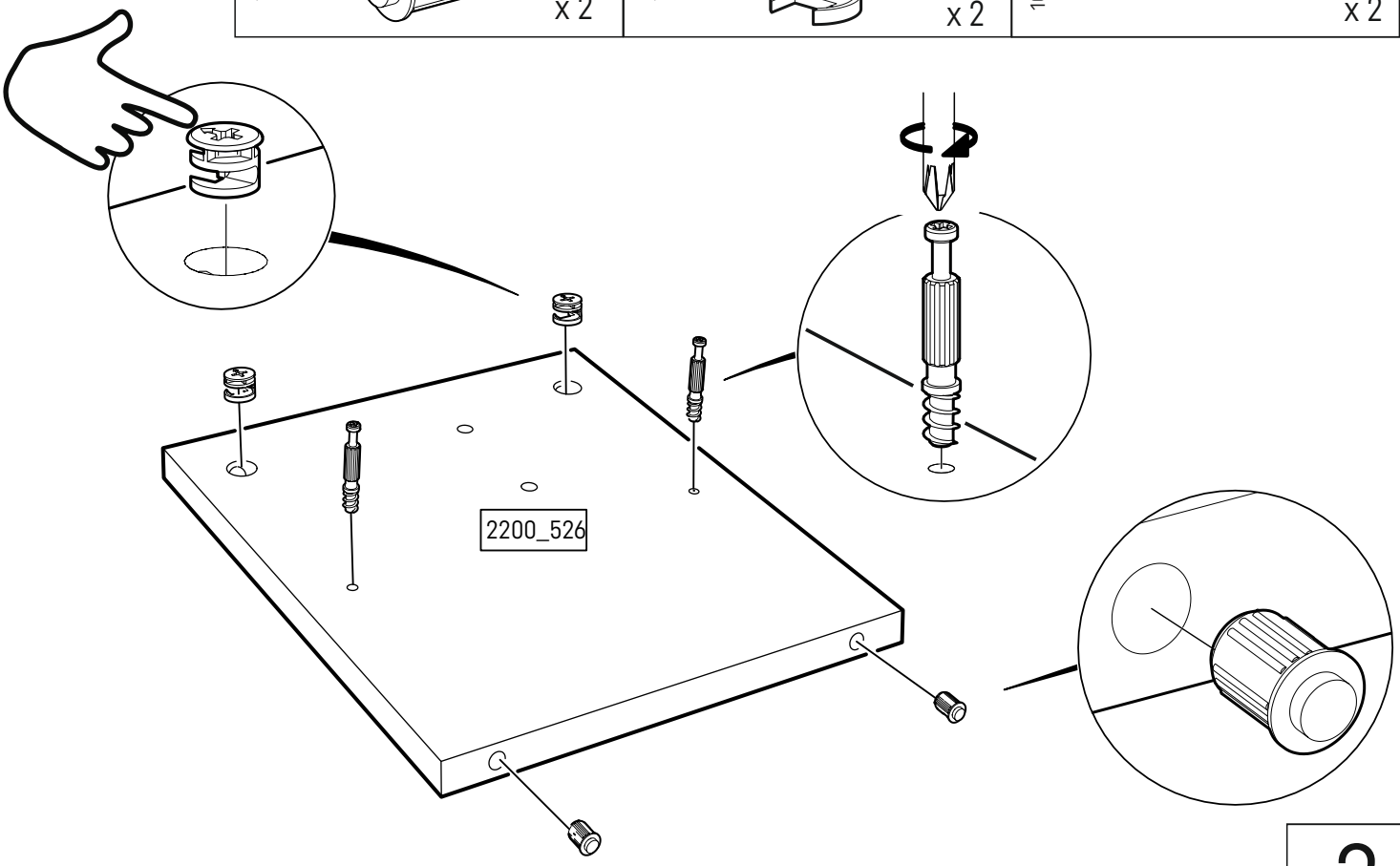

7

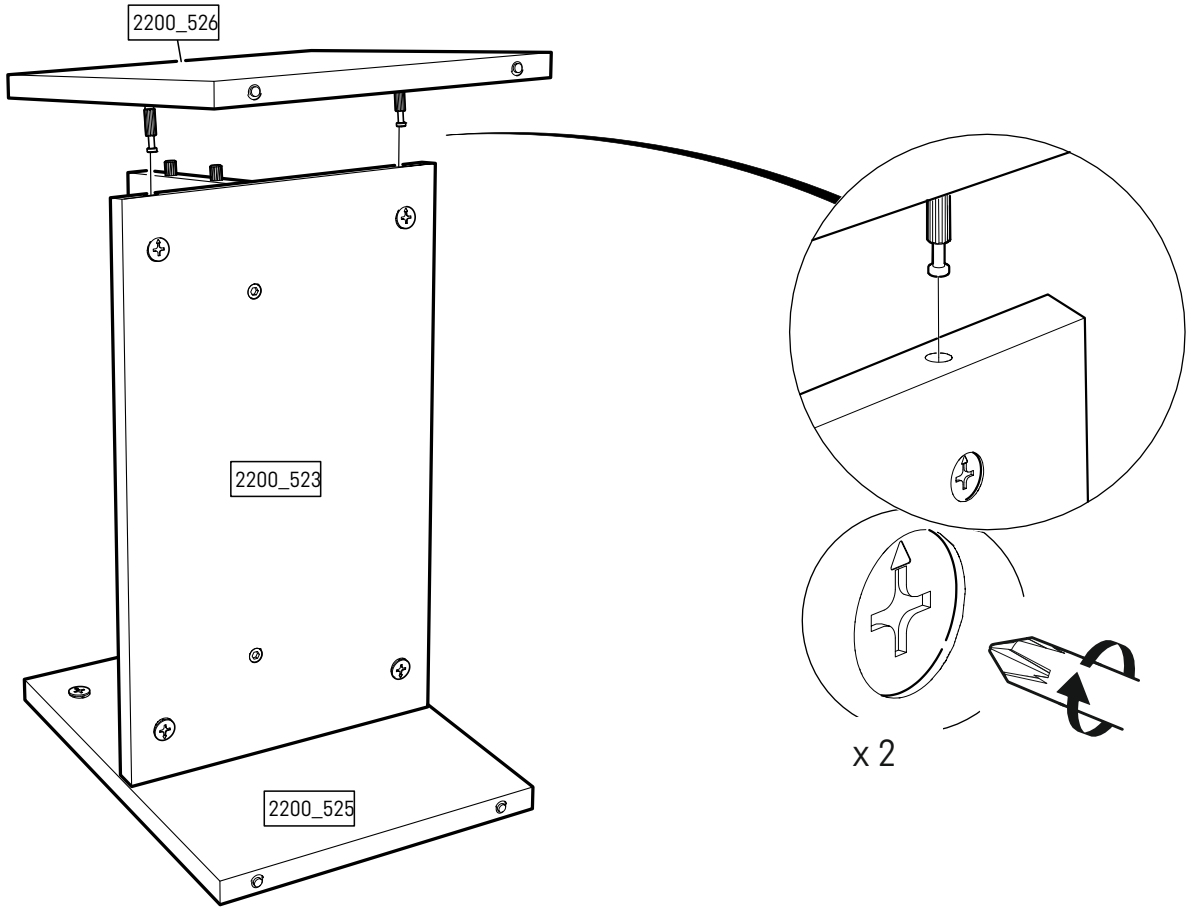

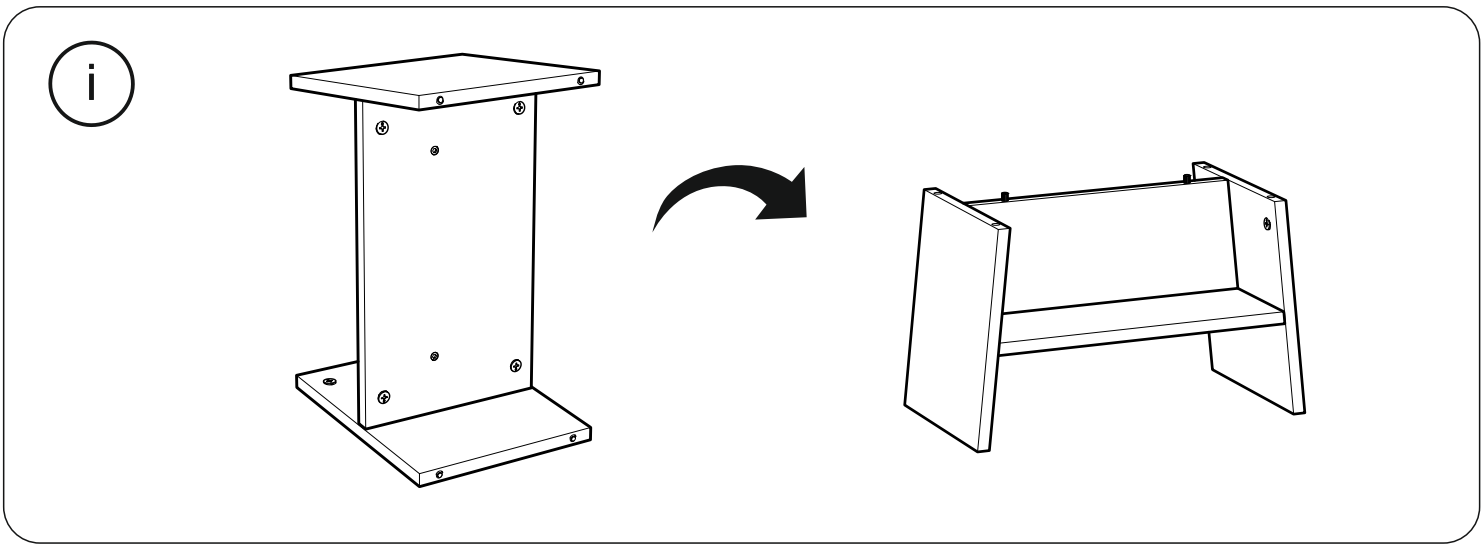

8

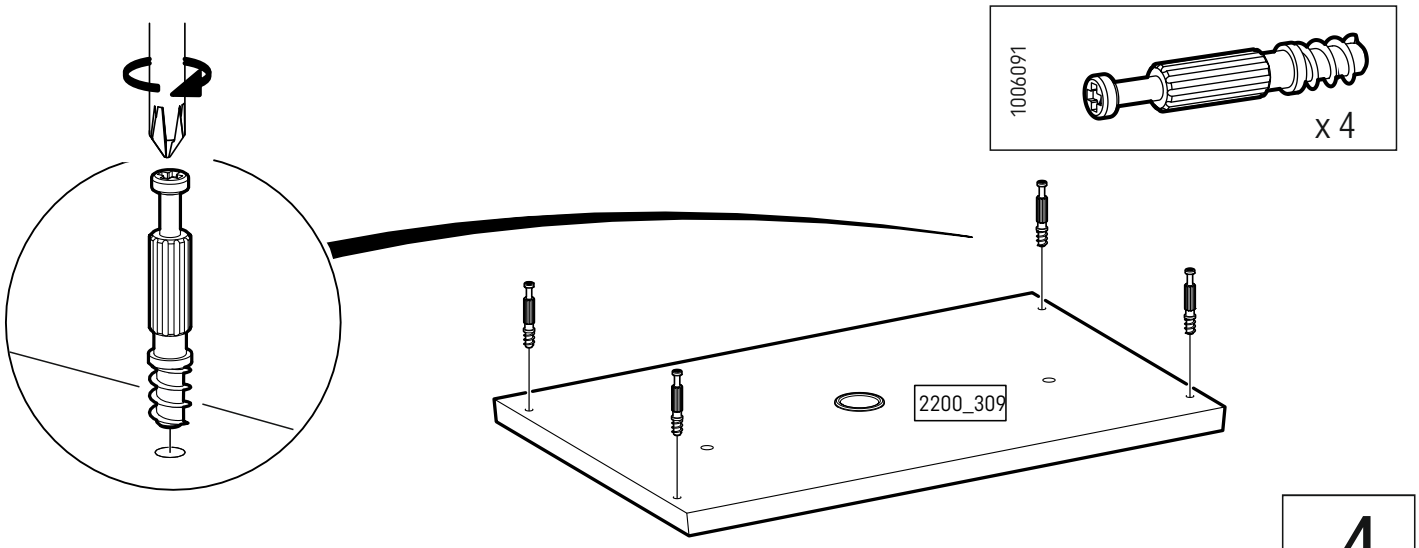

9

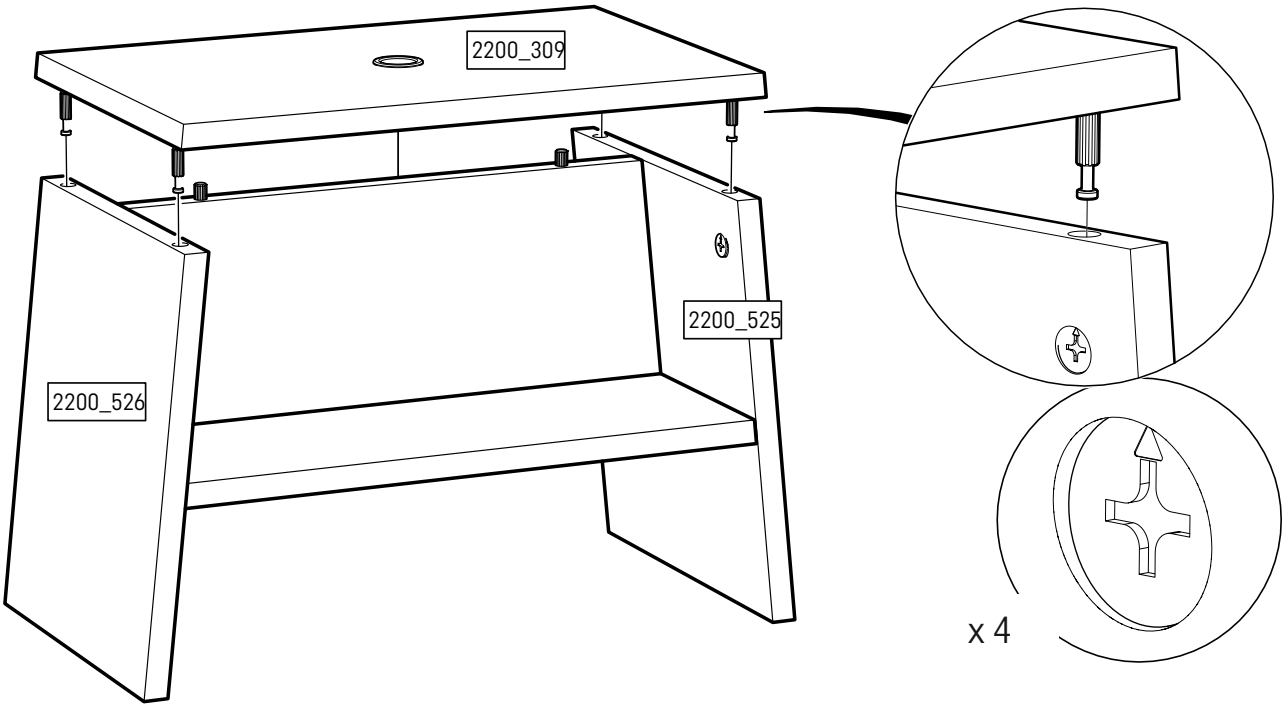
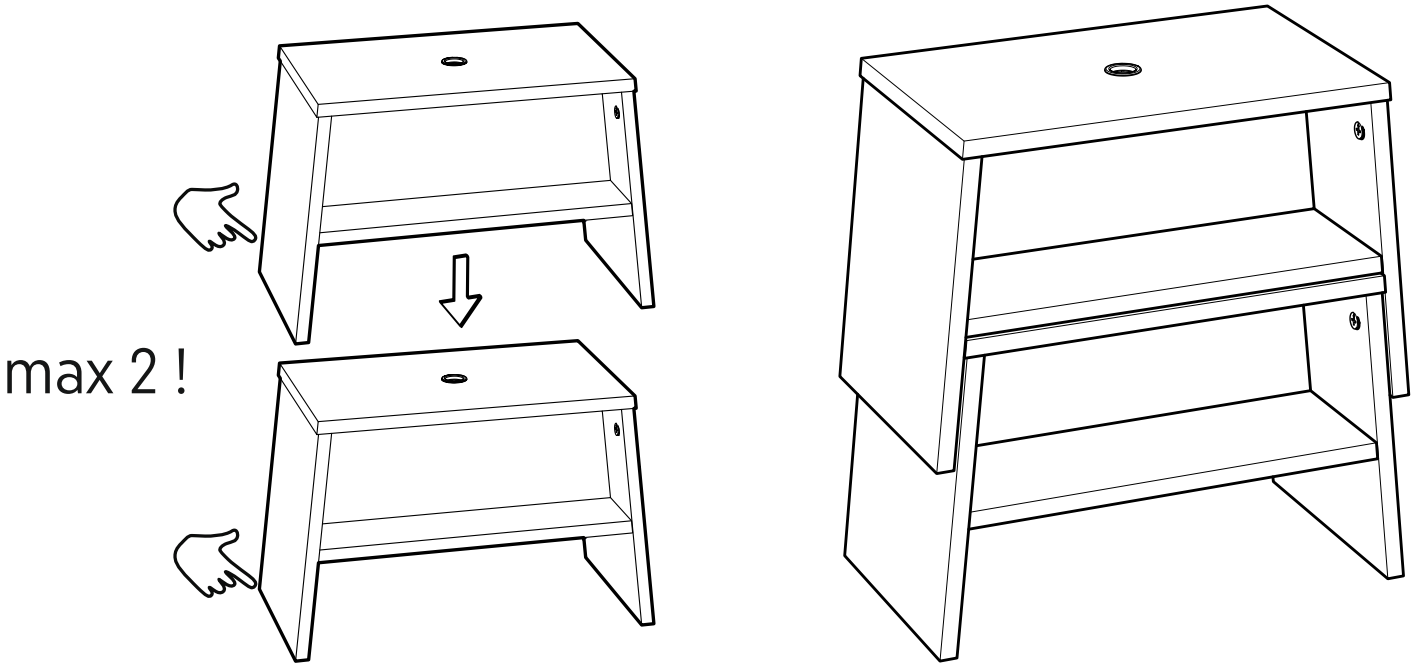
i